Mounting Dimensions – Axial model KRMSVS00MF40039M

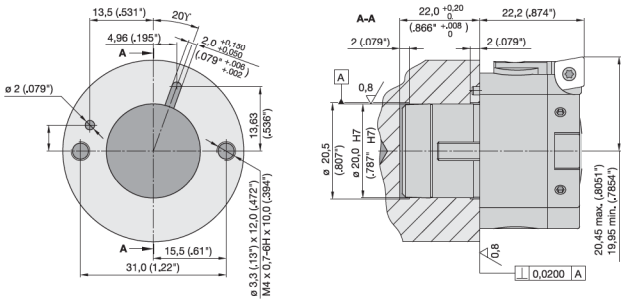

Dimensions in mm (inches)

Mounting Dimensions – Axial model KRMSVS00MF60055M

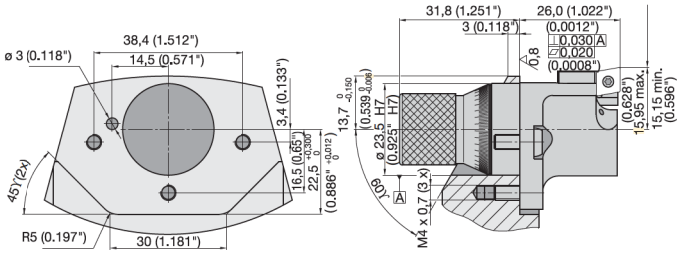

Dimensions in mm (inches)

Mounting Dimensions – Radial Models

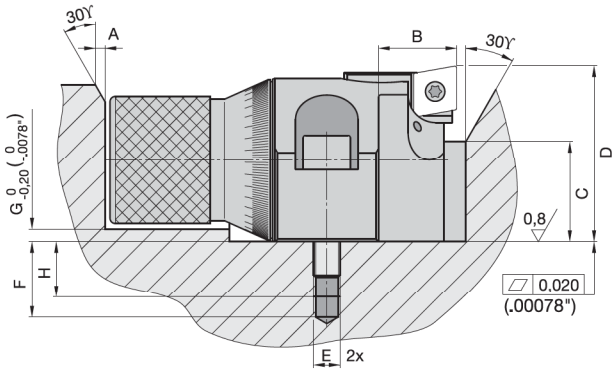

Dimensions in mm (inches)

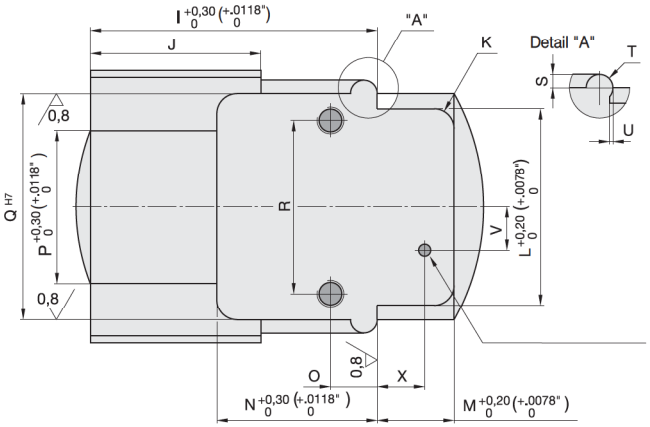

Dimensions in mm (inches)

dimensions	KRMSVS00M50049M mm	KRMSVS00M055M mm	KRMSVS2M100080M mm
A	1,7	1,7	4,0
B	12,5	15,0	22,7
C	14,5	14,5	28,0
D (mean dimension)	25,4	27,6	48,0
E	M4 x 0,7	M4 x 0,7	M8 x 1,25
F	11,0	12,0	25,0
G	1,5	1,5	1,5
H	8,0	10,0	22,0
I	40,0	41,5	59,0
J	25,5	24,0	34,0
K	3,0	3,0	4,0
L	29,5	30,5	55,0
M	12,0	15,0	24,5
N	20,0	21,0	31,0
O	7,0	11,0	12,5
P	23,0	23,0	40,0
Q	34,0	40,0	65,0
R	26,0	30,5	50,0
S	2,0	1,5	4,0
T	2,0	3,0	4,0
U	0,0	0,5	0,0
V	6,5	7,0	10,5
X	7,1	10,0	15,7